[illegible]

BR-3000

[illegible]

[illegible]

[illegible]

[illegible]

■ [illegible]

[illegible]

[illegible]1[illegible]

■ [illegible]

BR-3000[illegible]
[illegible]300mm[illegible]
[illegible]

CCTV[illegible]

■ [illegible]

[illegible]	
■ [illegible] ■ [illegible] ■ [illegible]	
⚠	[illegible]
⊘	[illegible]
❗	[illegible]

⚠ [illegible]	
⊘ [illegible]	■ [illegible]
	■ [illegible]
	■ [illegible]
	■ [illegible]
	■ [illegible]
	■ [illegible]
❗ [illegible]	■ [illegible]
	■ [illegible]
	■ [illegible]
	■ [illegible]

※ [illegible]

- [illegible] 15kg [illegible]
  [illegible] + [illegible] + [illegible]
- [illegible]
  [illegible]

■ [illegible]

1, [illegible] 4 [illegible]
[illegible]
[illegible]

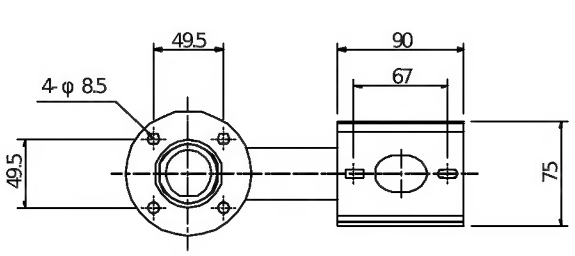

[illegible]

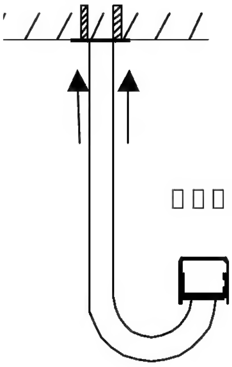

[illegible] 4 [illegible]

2, [illegible] 1/4 [illegible]
[illegible]
[illegible]

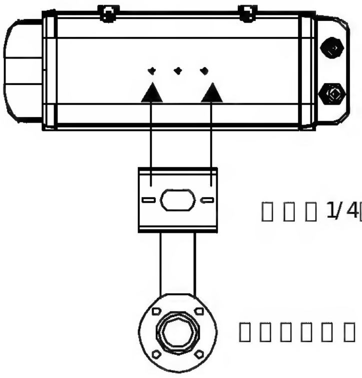

[illegible]

[illegible] 1/4 [illegible] 2 [illegible]

[illegible]

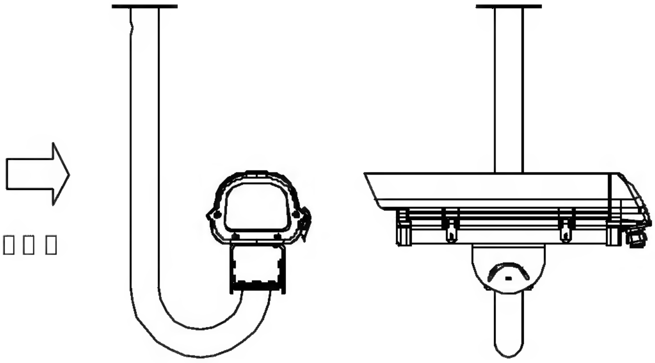

[illegible]

3, [illegible]
[illegible] 2 [illegible] 2 [illegible]
[illegible]

[illegible]

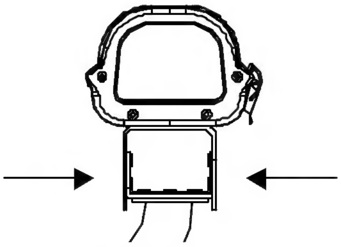

[illegible]

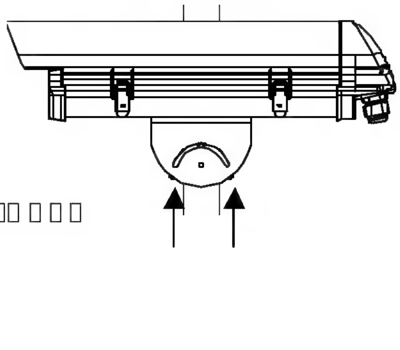

[illegible]

4, [illegible]
[illegible]

※ [illegible]
[illegible]

■ □□□□

□□	BR-3000
□□	□□□□□□
□□□□□□	15kg □□□□
□□□□□	40 ×85mm
□□□□	□□□□□
□□□□	φ89 × L490.5mm □□□□□□□□
□□	□0.6kg
□□	□□□□□ □□□□□
□□□	□□□□□□□□□1/4□□□ × 10mm 2□ □□□ 1□ □□ M5 × Φ 10mm □□□□□□□□□□□Sus□ 4□ M5 × Φ 12mm □□□□□□□Sus□ 4□ □□□□□□□□4mm□□□□□□ □□□□□□□□ 4□ 4mm × 30mm □□□□□□□Sus□ 4□ M5 × Φ 16mm □□□□□□□Sus□ 4□ □□□□□□□□□□

■ □□□□□

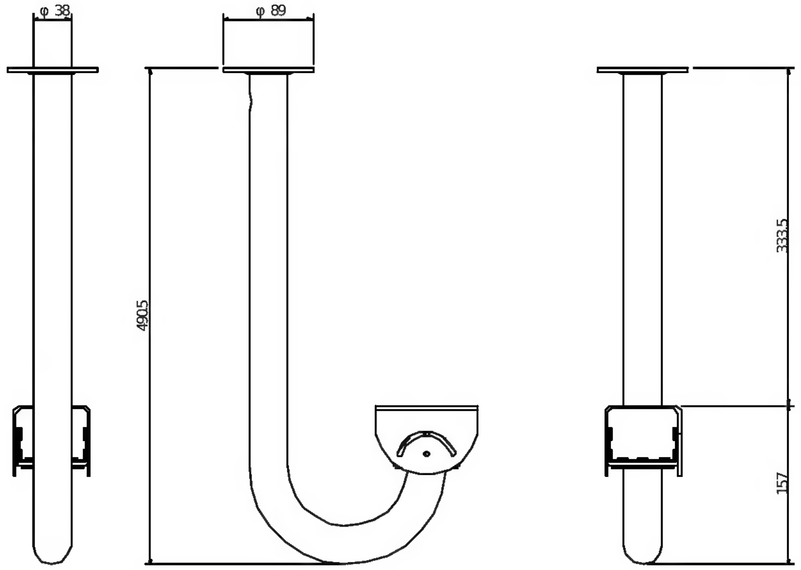

■ □□□□

1, □□□□ □□□□□□□□□□□□□□□□□□□□□□□□□

2, □□□□□

1, □□□□□□□□□□□□□□□□□□□□□□□□□□□□□□□□□□□
□□□□□□□□□□□□□□□□□□□□□□□□□□□□□□□□□

2, □□□□□□□□□□□□□□□□□□□□□□□□□□

3, □□□□□

□□□□□□□□□□□□□□□□□□□□□□□□□□□□□□□□□□□□
□□□□□□□□□□□□□/□□□□□□□□□□□□□□□□□
□□□□□□□□□□□□□□

□□	□□□□□□□□□□□□ BR-3000
□□□□□□	□ □ □
□□□ 	 TEL □ □ −

□□□□ □□□□□□□□□□

□ 607-8411

□□□□□□ □□□□□□ 37-7

TEL □ 075-593-2103 FAX □ 075-593-2868